Ambachtstraat 3, 4231 DP Meerkerk
Tel.: +31 183 74 52 10
Email: info@engel-trucks.com

Mercedes-Benz D WITH TENT BOX (MANUAL GEARBOX / FULL STEEL SUSPENSION / LOADING PLATFORM / ALUMINIUM SIDE BORDS)

ALGEMENE INFORMATIE

ID	SN 60920227
Bouwjaar	1980
Tellerstand	282.000 km
Opbouw	Huifzeil
Emissieklasse	1

TECHNISCHE INFORMATIE

Datum eerste toelating	15-05-1980
Brandstof	Diesel
Transmissie	Handgeschakeld
Asconfiguratie	4x2
Ledig gewicht	3.780 kg
Laadgewicht	3.710 kg
Max. gewicht	7.490 kg
Aantal cilinders	4
Vermogen in kW	63
Vermogen in pk	86
Wielbasis	360
Lengte	625 cm
Breedte	234 cm
Hoogte	243 cm

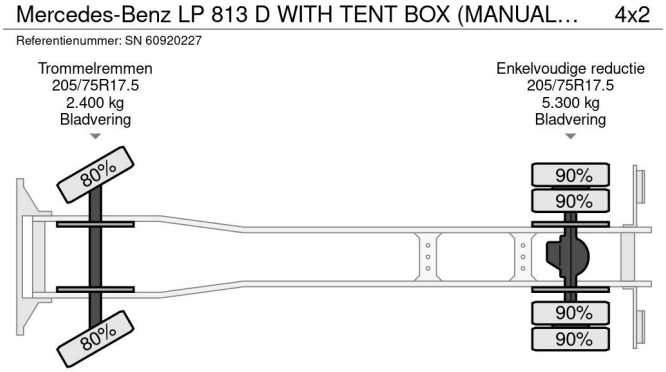

ACCESSOIRES

• 5 Versnellingen handgeschakeld • Aluminium zijborden • BLADGEVEERD • Hardhouten laadvloer • Radio/CD speler

BESCHRIJVING

Laadklep: DAUTEL, achtersluitklep, 750 kg

NICE & CLEAN CONDITION MERCEDES-BENZ LP813D 4x2 FULL STEEL WITH TENT BOX, ALUMINIUM SIDE BORDS & LOADING PLATFORM!!
130 HP, 4 CILINDER ENGINE, NO ELECTRONICS (MECHANICAL PUMP AND INJECTORS)!!
MANUAL GEARBOX!!
FULL STEEL SUSPENSION!!
ETC.!!

TENT BOX; SIZE; LENGTH x WIDE x HIGH Ca.: 4.55 m. x 2.27 m. x 1.80 m.!!
LOADING PLATFORM!!
70 cm. ALUMINIUM SIDE BORDS!!

TRUCK IS IN NICE, CLEAN AND GOOD DRIVING

CONDITION, READY FOR THE JOB!!

MORE MERCEDES-BENZ 4x2 / 4x4 / 6x4 / 8x4 (CONSTRUCTION) TRUCKS IN STOCK FOR SALE!! (>75 TRUCKS/TRAILERS IN STOCK)!!

PLEASE CHECK OUR WEBSITE; WWW.ENGEL-TRUCKS.COM

SHIPMENT, STACKING, TRANSPORT OR LOADING?, NO PROBLEM FOR US, WE ARE AN " ONE STOP SHOP " COMPANY!!

YOU CAN ALSO CHECK OUR COMPANY MOVIE ON YOUTUBE FOR THE FIRST IMPRESSION!! (https://drone-pro.nl/project/video-engel-trucks-bv-2017/)

ENGEL TRUCKS; " YOUR GLOBAL TRADING PARTNER "

Ambachtstraat 3, 4231 DP Meerkerk
Tel.: +31 183 74 52 10
Email: info@engel-trucks.com